English, Spanish, French, German, Italian, Portuguese, Swedish, Norwegian, Czech, Danish, Chinese, Turkish, Russian, Dutch, Polish and Arabic

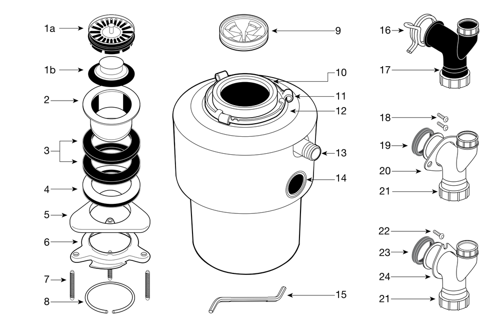

www.insinkerator.com

©2011 InSinkErator, a division of Emerson Electric Co. All Rights Reserved.

Part No. 76661 REV. A

220-240V, 50/60Hz

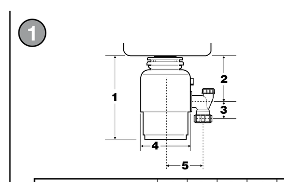

	1	2	3	4	5
(Evolution) 200-2, -7, -9	34.4 cm	18.5 cm	6.4 cm	23.4 cm	16.8 cm
(Evolution) 100-2, -7, -9	31.2 cm	17.1 cm	6.4 cm	20.5 cm	16.8 cm
Model 65-2B, -7C, -9B	31.8 cm	16.8 cm	6.4 cm	18.5 cm	13.1 cm
Model 55-2B, -2B A/S, -7C, -9B	31.8 cm	16.8 cm	6.4 cm	17.3 cm	13.1 cm
Model 45-2B, -7B, -9B	31.8 cm	16.8 cm	6.4 cm	15.9 cm	13.1 cm
LC-50-13	36.9 cm	19.3 cm	6.4 cm	20.6 cm	14.9 cm

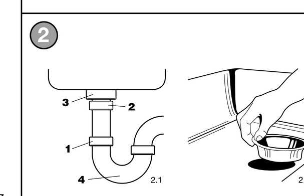

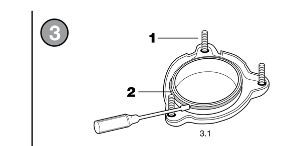

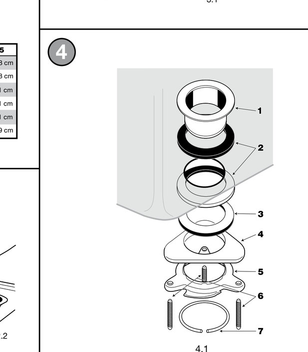

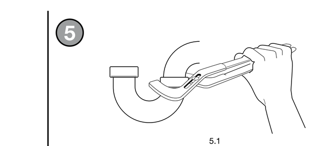

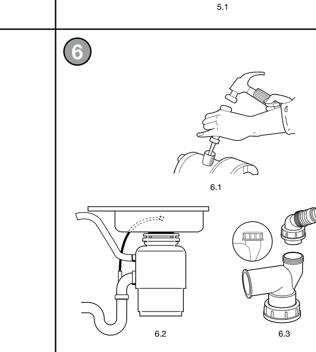

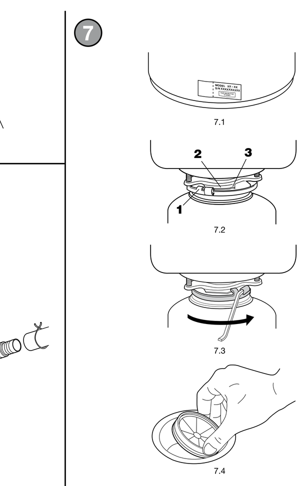

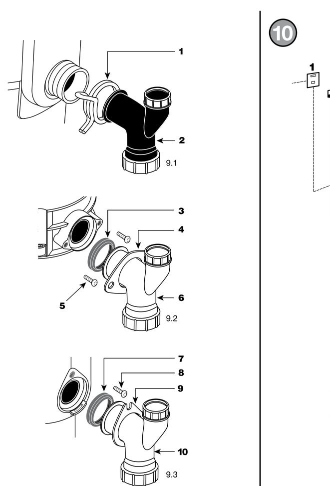

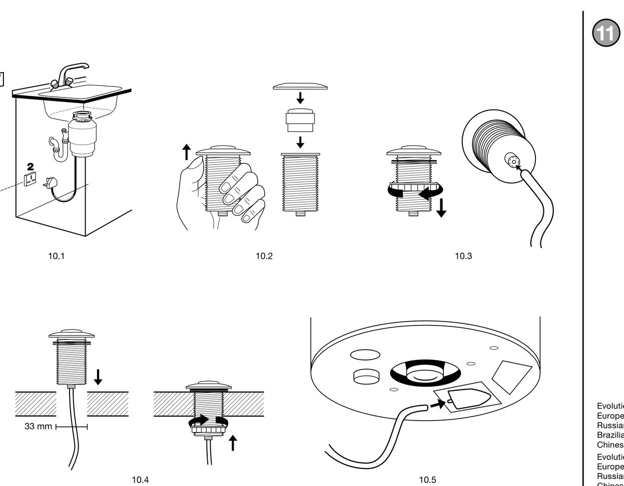

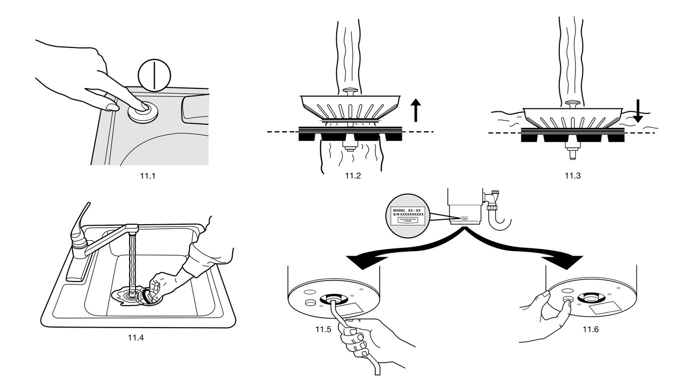

Evolution 100:
European Pat. No. 000527031-0001, 000541610-0001, 000558002-0001, 1633933, and other foreign patents pending
Russian Pat. No. 64181, 64182, 64536
Brazilian Pat. No. DI 6601523-5, DI 6602045-0, DI 6602382-3
Chinese Pat. No. ZL 200630014273.8, ZL 200630131873.2, ZL 200630131919.0, and other foreign patents pending
Evolution 200:
European Pat. No. 000527031-0003, 1358013, 000541610-0001, 000570940-0002, 000558002-0001, 1441856, 1633933, and other foreign patents pending
Russian Pat. No. 64181, 64182, 67337, 64536
Chinese Pat. No. ZL 200630014271.9, ZL 200630131873.2, ZL 200630136722.6, ZL 200630131919.0, ZL 02823439.1, ZL200580006027.0, and other foreign patents pending

InSinkErator Division
Emerson Electric Co.
4700 21st Street
Racine, WI 53406-5093 USA
Tel: 262-554-3652
www.insinkerator.com/worldmap.html

InSinkErator Division
Suite 6, Building 6
Hatters Lane, Croxley Green Business Park
Watford HERTS WD18 8YH
United Kingdom
Sales Tel: (0) 1 923 297 880
Service Tel: (0) 800 389 3715
www.insinkerator.co.uk

Emerson Trading (Shanghai) Co., Ltd.
InSinkErator Division
16/F Jiu Shi Tower, 28 Zhong Shan
Road (South)
Shanghai 200010, P.R. China
Tel: 86 21 6333 0808
www.insinkerator.com.cn

ENGLISH

FOOD WASTE DISPOSER INSTALLATION, CARE & USE MANUAL

Food waste disposers provide an environmentally responsible alternative to transporting food waste to landfills. And they can help reduce greenhouse gas emissions. At capable wastewater treatment plants, food waste can be converted to biosolids and used as fertilizer. Capable plants can also capture methane gas and recycle it as an energy source. (Check the plant in your area.)

Read through the entire Installation, Care & Use manual before installing the disposer. Determine which of the tools, materials, and accessories you will need before you begin. Make sure you have all necessary disposer parts before installing the disposer.

NOTE: The Evolution models grind much finer than any other disposer. For this reason you may notice that it takes a little longer to grind some food waste. Due to the Evolution 200 model's microprocessor, users will experience a fractional second delay when starting on all Evolution 200 models. This is completely normal.

NOTE: Make sure that the installation of this appliance is allowed by the authorities.

TOOLS & MATERIALS YOU WILL NEED:
Slotted Screwdriver, Adjustable Pliers, Electrical Tape, Safety Glasses

TOOLS, MATERIALS, AND ACCESSORIES YOU MAY NEED:
Phillips Screwdriver, Drain Auger, 9.5 mm Electrical Clamp, Wire Nuts (2), 38 mm Drain Trap, 33 mm Hole Drill, Hammer, Hacksaw, Water Hose Clamp, Pipe Wrench, Copper Earth Wire, Dishwasher Drain Connection Kit, Electrical On/Off Switch, Drain Tube Extension

PARTS LIST (May vary depending on model)

MOUNTING ASSEMBLY
1a. Strainer Basket and Plug (Evolution models)
1b. Stopper (Models 65, 55, 45, LC-50)
2. Sink Flange
3. Rubber Gaskets (2)
4. Fiber Gasket (optional)
5. Backup Ring
6. Mounting Ring
7. Screws (3)
8. Snap Ring

DISPOSER
9. Sound Baffle (Evolution models, Model 65)
10. Mounting Gasket/Splash Baffle
11. Lugs
12. Lower Mounting Ring
13. Dishwasher Inlet
14. Discharge Outlet
15. Wrenchette

DISCHARGE ASSEMBLY #1
(Evolution models)
16. Hose Clamp
17. Black Elbow Discharge Tube (38 mm diameter/Evolution flange)

DISCHARGE ASSEMBLY #2
(Models 65, 55, 45)
18. Bolts (2) 13 mm 1/4-20 UNC
19. Rubber Gasket
20. Metal Flange
21. White Elbow Discharge Tube (38 mm diameter/non-Evolution flange)

DISCHARGE ASSEMBLY #3
(LC-50 for household installation)
22. Bolt (1) 19 mm 1/4-20 UNC
23. Rubber Gasket
24. Metal Flange
21. White Elbow Discharge Tube (38 mm diameter/non-Evolution flange)

▲WARNING	Warning indicates a potentially hazardous situation which, if not avoided, could result in death or serious injury.
▲CAUTION	Caution, used with the safety alert symbol, indicates a hazardous situation which, if not avoided, could result in minor or moderate injury.
CAUTION	Caution, without the safety alert symbol, is used to address practices not related to personal injury.

1 CHECK INSTALLATION DIMENSIONS

1. Disposer Height
2. Distance from bottom of sink bowl to centerline of discharge outlet. (Add 12 mm when stainless steel sink is used.)
3. Distance from centerline of the discharge outlet to end of discharge tube.
4. Disposer Width
5. Distance from disposer vertical centerline to centerline of trap connection.

To properly drain and prevent standing water in the disposer, the waste pipe entering the wall must be lower than the disposer discharge outlet.

2 DISCONNECT SINK DRAIN

▲CAUTION
PERSONAL INJURY
Wearing safety glasses is recommended during the installation of the food waste disposer.

1. Loosen nut (1) at top of trap (4) with pipe wrench (see Figure 2.1).
2. Loosen nut (2) at top of extension pipe. Remove extension pipe.
3. Loosen nut (3) at base of sink flange.
4. Push sink flange up through sink hole and remove it (see Figure 2.2).
5. Clean sink flange area of any putty or other debris.

NOTE: The sink hole may have to be enlarged to accept the disposer sink flange. Sink hole enlargement tools are available from your InSinkErator Dealer.

3 DISASSEMBLE NEW DISPOSER MOUNTING ASSEMBLY

1. Turn mounting assembly over (see Figure 3.1) and loosen three mounting screws (1) until you can access snap ring (2).
2. Use screwdriver to pry snap ring off of sink flange. Mounting assembly will now come apart.

4 ATTACH UPPPER MOUNTING ASSEMBLY TO SINK

Reference Figure 4.1.

1. Place one of two rubber gaskets (2) under sink flange (1). Ensure sink hole area is clear of debris and place sink flange/gasket into sink hole. You may wish to place a weighted object in the sink to hold the sink flange in place. (Place a towel under object to prevent scratching.)
2. Working from under the sink, slip second rubber gasket (2), fiber gasket (optional) (3) and metal backup ring (4) (flat side up) over the sink flange.
3. Holding second rubber gasket, fiber gasket (optional) and metal backup ring in place, slip mounting ring (5) over sink flange so it seats against backup ring.
4. With the rubber gasket, fiber gasket (optional), backup ring, and mounting ring tight against sink bottom, slide snap ring (7) onto sink flange until it pops into groove on flange.
5. Tighten three mounting screws (6) up to sink until mounting assembly is seated tightly and evenly against sink.

5 CLEAN SINK WASTE PIPE

Failure to clean sink waste pipe line may result in waste pipe blockage.

1. Remove trap. (See Figure 5.1)
2. With drain auger, clear away all hardened waste material in horizontal drain line running from drain trap to main pipe.

IF YOU ARE NOT CONNECTING A DISHWASHER TO DISPOSER, SKIP AHEAD TO INSTRUCTION 7.

6 DISHWASHER ATTACHMENT AND OVERFLOW CONNECTION

Wastewater from a dishwasher can be plumbed into the disposer through the inlet access on the upper part of the disposer. There is a plug on the inside of the inlet tube on all models. Once removed, the knockout plug cannot be replaced.

NOTE: If the dishwasher connection is made without removing the plug, the dishwasher may overflow. (Connections must comply with local plumbing codes.)

REMOVE KNOCKOUT PLUG
1. Lay disposer on its side and insert screwdriver into dishwasher inlet so tip rests on outer edge of knockout plug.
2. Tap end of screwdriver handle with hammer until molded plug breaks loose (see Figure 6.1).
3. Remove loose knockout plug from inside disposer.

If you have a sink overflow, it should be connected to the overflow inlet on the tailpipe (see Figure 6.2). To connect the overflow, remove the plug in the tailpipe by unscrewing the overflow connector cap (see Figure 6.3).

7 CONNECT DISPOSER TO MOUNTING ASSEMBLY

▲CAUTION
PERSONAL INJURY
To avoid personal injury, do not position your head or body under disposer; the unit could fall during installation.

Clear any objects from inside the disposer grind chamber before mounting the disposer to the sink.

1. This product must be installed so that the motor reset button located on the bottom of the disposer is readily accessible. Keep this space clear of all objects.
2. Prior to connecting disposer to mounting assembly, detatch the perforated portion of the specification label found at the base of the disposer, and set aside for Instruction 8. (See Figure 7.1)
3. Position disposer with three mounting tabs (1) aligned in position to slide over mounting tracks (2). (See Figure 7.2)
4. Lift disposer, insert top end (mounting gasket) into mounting assembly, and turn lower mounting ring to right (with wrenchette or adjustable pliers) until mounting tabs lock over ridges (3) on mounting ring tracks (see Figure 7.3). **Make sure all three mounting tabs are locked over ridges.** Disposer will now hang by itself.
5. Run water into sink, then check for leaks.

EVOLUTION 200 AND EVOLUTION 100, MODEL 65
Insert sound baffle into sink opening, with flat side upward. (See Figure 7.4)

8 ATTACH SPECIFICATION LABEL

This specification label contains important information you will need to know in the event service is required.

1. Apply the label to the front side of the disposer, where it can be easily read.

MODEL XX – XX
S/N XXXXXXXXXX
PUSH RED BUTTON TO RESET

9 ATTACH DISCHARGE TUBE TO WASTE DRAIN PIPE

CAUTION
PROPERTY DAMAGE
- Wearing safety glasses is recommended during the installation of the food waste disposer.
- All Evolution 200 and Evolution 100 models must be connected to the supplied tailpipe with the supplied spring type hose clamp (See Figure 9.1). Failure to use the supplied tubes and spring type hose clamp will void the guarantee and possibly cause premature failure of the Anti-Vibration Tailpipe Mount™.
- Do not use plumber's putty on any other disposer connection other than on sink flange. Do not use thread sealants or pipe dope. These may harm disposer and cause property damage.
- Regularly inspect disposer and plumbing fittings for water leaks, as water leaks can cause property damage. Manufacturer cannot be held responsible for property damage as a result of water leaks.

DISCHARGE TUBE INSTALLATION (EVOLUTION 200 AND EVOLUTION 100)
1. Place discharge tube (2) into Anti-Vibration Tailpipe Mount™. Secure with spring type hose clamp (1). (See Figure 9.1)

DISCHARGE TUBE INSTALLATION (MODELS 65, 55, 45)
1. Place metal flange (4) over discharge tube (6). Insert rubber gasket (3) with gasket lip facing the metal flange into discharge tube. (See Figure 9.2)
2. Secure metal flange and discharge tube to disposer with two 13 mm bolts (5).

DISCHARGE TUBE INSTALLATION (LC-50)
1. Place metal flange (9) over discharge tube (10). (See Figure 9.3)
2. Insert rubber gasket (7) with the gasket lip facing the metal flange into discharge tube (gasket may be pre-fitted in discharge tube). Secure metal flange and discharge tube to disposer with one 19 mm bolt (8) (Gasket will hold in place).

ALL DISPOSERS CONTINUE WITH STEPS 3-5
3. Rotate disposer so that discharge tube is aligned with drain trap. (To prevent leaks, do not pull or bend discharge tube to drain trap.) If discharge tube is too short, you can purchase an extension from hardware store. (Disposer must remain in vertical position to prevent vibration.)
4. Place nut, then ferrule on discharge tube (not supplied) and tighten on drain trap. (If you have a double sink, use separate drain traps for both sides of sink.)
5. Ensure lower mounting ring is still securely locked over ridges on mounting flange. (See Figure 7.3)

10 CONNECT DISPOSER TO ELECTRICAL SUPPLY

▲WARNING
ELECTRICAL SHOCK
- To avoid electrical shock, disconnect power before installing or servicing disposer.
- If you are not thoroughly familiar with electric power, contact a qualified electrician to connect disposer to electrical circuit.
- If three-prong, earth (grounded) plug is used, plug must be inserted into three-hole, earth (grounded) receptacle.
- Do not modify plug provided with unit (if applicable).
- Improper connection of equipment earth (grounded) conductor can result in electric shock.
- All wiring must comply with local electrical codes.
- Do not attach earth wire (ground wire) to gas supply pipe.
- Do not reconnect electrical current at main service panel until proper earth (grounded) outlets are installed.
- If the supply cord is damaged, it must be replaced by the manufacturer, its service agent or similarly qualified-persons in order to avoid a hazard.

NOTE: You must have access to an earth (grounded) wall socket. Any additional socket should be fitted by a qualified electrician and properly earthed (grounded). The disposer is fitted with a molded plug and cable.

ON/OFF CONTROL
There are two types of controls for continuous-feed disposers: a double-pole switch and an air switch (built in for Evolution 200, Evolution 100, and Model 65; available as an accessory on all other models).

Double Pole Switch (1):
If a wall switch (not supplied) is required for your installation, it must have on/off markings and be installed by a qualified tradeperson. It should be located in a convenient position above the work surface with a minimum of 3 mm contact separation between each pole (20 ADP switches to BS 3676). Connect to a 20 amp earth (grounded) wall socket (2) using a 20 amp cable. (See Figure 10.1)

Air Switch (Evolution 200, Evolution 100, Model 65, and Model 55-2B A/S):
The Evolution 200, Evolution 100, Model 65, and Model 55-2B A/S disposers include a built-in air switch (Brushed Nickel and Chrome finishes). An air switch activates/turns off the unit by sending a pulse of air to the control box.

AIR SWITCH INSTALLATION
The air switch includes two different button finishes. If you wish to change the button finish (optional), simply pry off the existing button and snap the other button finish onto the bellows. (See Figure 10.2)
1. Drill a 33 mm wide hole into the kitchen work top, or the corner of the sink unit, at the most convenient point for use. Some sink units may already have a suitable hole in them which can be exposed by removing the cap.
2. Remove the nut from the push button bellows, while keeping the stainless steel washer and rubber gasket in place. Push one end of the PVC tubing onto the spout of the push button bellows, feed the other end of the tube through the hole in the work top and through the nut underneath the work top. (See Figure 10.3)
3. Fit the push button bellows in the hole and then screw up the nut underneath the work top until it is hand tight. **Do not use a wrench to tighten the nut.** (See Figure 10.4)
4. Take the other end of the air tube and firmly push it over the spout of the air switch, which is located on the underside of the waste disposer. (See Figure 10.5)

DISABLING THE AIR SWITCH
The air switch can be disabled if wall switch operation is preferred. The disposer is shipped with the switch in the " off " position.
1. Push one end of the PVC tubing provided onto the spout of the push button bellows. (See Figure 10.3)
2. Take the other end of the air tube and push it over the spout of the air switch, which is located on the underside of the waste disposer. (See Figure 10.5)
3. Depress the air switch one time until you hear the switch "click." Remove and discard the push button bellows and PVC tubing. The disposer may now be activated by a wall switch.

The disposer installation is complete. Read all operating and safety instructions in Instruction 11 before operating the disposer.

Lastly, place stopper in sink in close position. Fill sink with water, remove stopper, turn disposer on and check for leaks.

11 IMPORTANT SAFETY INSTRUCTIONS

▲WARNING
When using electronic appliances, basic precautions are always to be followed, including:
- If the air switch or wall switch fails to shut off or turn on disposer, unplug power cord plug and contact your qualified trade person.
- This product is designed to dispose of normal household food waste; inserting materials other than food waste into disposer could cause personal injury and/or property damage. To reduce the risk of injury, do not use the sink containing the disposer for purposes other than food preparation (such as baby bathing or washing hair).
- This appliance is not intended for use by persons (including children) with reduced physical, sensory or mental capabilities, or lack of experience and knowledge, unless they have been given supervision or instruction concerning use of appliance by a person responsible for their safety. Children should be supervised to ensure that they do not play with disposer. To reduce the risk of injury, close supervision is required when an appliance is used near children.
- When attempting to loosen a jam in the food waste disposer, switch off or unplug the appliance before attempting to free a jammed rotor. Use a self service wrenchette as described in the Releasing Disposer Jam section.
- Use long-handled tongs or pliers to remove objects from disposer.
- To reduce the risk of injury by materials that are expellable by a waste disposer, do not operate Evolution disposers without the sound baffle in place (see Figure 7.4). Place stopper in sink opening as shown in Figure 11.2 or 11.4. Do not put the following into a disposer: clam or oyster shells, caustic drain cleaners or similar products, glass, china, or plastic, large (whole) bones, metal (such as bottle caps, steel shot, tin cans, or utensils), hot grease or other hot liquids.
- Replace sound baffle/mounting gasket/splash baffle when worn to help prevent entry or ejection of material and water.
- When not using disposer, leave stopper in place to reduce risk of objects falling into disposer. Make sure disposer power switch is turned off.
- Before pressing reset button, attempting to clear jam, or removing objects from inside disposer, make sure disposer power switch is turned off.
- Do not insert hands or fingers into disposer.
- FIRE HAZARD: Do not store flammable items such as rags, paper, or aerosol cans near disposer. Do not store or use gasoline or other flammable vapors and liquids in vicinity of disposer.
- Do not dispose of the following in the disposer: paints, solvents, household cleaners and chemicals, automotive fluids, plastic wrap.

OPERATING INSTRUCTIONS (EVOLUTION 200 AND EVOLUTION 100)
1. Remove strainer basket and plug from sink opening and run cold water.
2. Turn on wall switch or press air switch (see Figure 11.1) to start disposer.
3. Slowly insert food waste into disposer and position strainer basket and plug in upright position (allowing water to run through) to minimize noise and possible ejection of material while grinding (See Figure 11.2).
4. After grinding is complete, turn disposer off and run water for at least 15 seconds to flush drain line.
5. Strainer basket and plug also acts as a stopper in the lower position. (See Figure 11.3)

OPERATING INSTRUCTIONS (MODELS 65, 55, 45, LC-50)
1. Remove stopper from sink opening and run cold water.
2. Turn on wall switch or press air switch (see Figure 11.1) to start disposer.
3. Slowly insert food waste into disposer and position stopper to minimize possible ejection of material while grinding. (See Figure 11.4)
4. After grinding is complete, turn disposer off and run water for at least 15 seconds to flush drain line.

DO...
- Grind food waste with minimum cold water flow of 6 liters per minute (1.5 G.P.M.).
- Grind hard material such as small bones and fruit pits to clean inside of grind chamber.
- Grind citrus, melon rinds, vegetables, and coffee grounds.
- After grinding, run water for at least 15 seconds to flush drain line.
- Switch off or unplug the appliance before attempting to free a jammed rotor with an implement.
- Maintain the area underneath the disposer of any objects to be sure you have access to the disposer reset button.

DON'T...
- Don't use hot water when grinding food waste (although hot water can be drained into disposer between grinding periods).
- Don't turn off water or disposer until grinding is completed and only sound of motor and water running is heard.
- Don't grind large amounts of egg shells, fibrous materials like corn husks, artichokes, etc., to avoid possible pipe blockage.
- Don't grind non-food waste of any kind.
- Don't use this appliance to dispose of hard materials such as glass and metal.
- Don't ever pour fats, oils or grease down the sink – it will block your drains and the sewerage system.
- Don't fill disposer with a lot of vegetable peels all at once. Instead, turn the water and disposer on first and then feed the peels in gradually.
- Don't waste food. Nearly a quarter of the food we buy is thrown away untouched: salad, bread and cakes lead that list. Three tips to stop waste and save you money: only buy, or cook, the portions you need for the meal; check the fridge and cupboard for food you haven't eaten–make it your next snack or freeze it; and make sure you leave that food off your next shopping list!

CLEANING DISPOSER
Over time, grease/food particles may accumulate in the grind chamber and baffle, causing an unpleasant odor. To clean the disposer:
1. **Turn off disposer** and disconnect power supply.
2. Reach through sink opening and clean underside of splash baffle and inside upper lip of grind chamber with scouring pad.
3. Place stopper in sink opening and fill sink halfway with warm water.
4. Mix 60 ml baking soda with water. Turn disposer on and remove stopper from sink at same time to wash away loose particles.

RELEASING DISPOSER JAM
If the motor stops while the disposer is operating, the disposer may be jammed. To release jam:
1. Turn disposer power and water off.
2. Insert one end of the self-service wrenchette into the center hole on the bottom of the disposer (see Figure 11.5). Work the wrenchette back and forth until it turns one full revolution. Remove wrenchette.
3. Reach into the disposer with tongs and remove object(s). Allow the disposer motor to cool for 3 - 5 minutes and lightly push red reset button on the disposer bottom (see Figure 11.6). (If the motor remains inoperative, check the service panel for tripped circuit breakers or blown fuses.)

IN-HOME FULL SERVICE GUARANTEE

Warranty is determined by the unit serial number and the date of installation. Purchase or installation receipt may be required to verify warranty status.

Evolution 200: 6 years	Evolution 100: 5 years
Model 65: 4 years	Model 55: 3 years
Model 45: 2 years	LC-50: 1 year

SERVICE
If service is required, contact an InSinkErator Authorized Service Center (See enclosed list) or your dealer. Guarantees are void if you remove your disposer after installation and attempt to repair it, or if the disposer is used for commercial purposes.

ESPAÑOL

MANUAL DE INSTALACIÓN, MANTENIMIENTO Y USO DEL TRITURADOR DE DESPERDICIOS DE COMIDA

LISTA DE PIEZAS (puede variar según el modelo)

▲ADVERTENCIA	ADVERTENCIA indica una situación potencialmente arriesgada, la cual, si no es evitada, puede provocar muerte o heridas graves.
▲PRECAUCIÓN	Precaución, empleado junto con el símbolo de alerta, indica una situación potencialmente riesgosa, la cual, si no se evita, puede provocar heridas leves o moderadas.
PRECAUCIÓN	Precaución, empleado sin el símbolo de alerta, hace referencia a prácticas que no presentan riesgos de generar lesiones personales.

1 REVISE LAS DIMENSIONES DE INSTALACIÓN
2 DESCONECTE EL DRENAJE DEL FREGADERO
3 DESARME EL CONJUNTO DE MONTAJE DEL TRITURADOR NUEVO
4 CONECTE EL CONJUNTO DE MONTAJE SUPERIOR AL FREGADERO
5 LIMPIE LA CAÑERÍA DE DESAGÜE DEL FREGADERO
6 COLOCACIÓN DEL LAVAVAJILLAS Y CONEXIÓN DEL REBOSADERO
7 CONECTE EL TRITURADOR AL CONJUNTO DE MONTAJE
8 COLOQUE LA ETIQUETA DE ESPECIFICACIONES

MODEL XX – XX
S/N XXXXXXXXXX
PUSH RED BUTTON TO RESET

9 CONECTE EL TUBO DE DESCARGA A LA CAÑERÍA DE DESAGÜE
10 CONECTE EL TRITURADOR AL SUMINISTRO ELÉCTRICO
11 INSTRUCCIONES IMPORTANTES PARA SU SEGURIDAD
GARANTÍA DE SERVICIO COMPLETO EN EL HOGAR

FRANÇAIS

GUIDE D'INSTALLATION, D'ENTRETIEN ET D'UTILISATION DU BROYEUR DE DÉCHETS

LISTE DES PIÈCES (peut varier selon le modèle)

▲AVERTISSEMENT	« Avertissement » indique une situation potentiellement dangereuse qui, si elle n'est pas évitée, risque d'entraîner des blessures graves, voire fatales.
▲MISE EN GARDE	« Avertissement » utilisé avec le symbole d'alerte Sécurité, signale une situation dangereuse qui, si elle n'est pas évitée, pourrait entraîner des blessures mineures ou modérées.
MISE EN GARDE	« Avertissement » utilisé sans le symbole d'alerte Sécurité se rapporte à des pratiques qui ne sont pas liées à des blessures.

1 VÉRIFIEZ LES DIMENSIONS DE L'INSTALLATION
2 DÉBRANCHEZ LE TUYAU D'ÉVACUATION DE L'ÉVIER
3 DÉSASSEMBLEZ LE MONTAGE DE BASE DU NOUVEAU BROYEUR DE DÉCHETS
4 RACCORDEZ LA PARTIE SUPÉRIEURE DU MONTAGE DE BASE À L'ÉVIER
5 NETTOYEZ LE TUYAU D'ÉVACUATION DES DÉCHETS DE L'ÉVIER
6 RACCORDEMENT DU LAVE-VAISSELLE ET DU TUYAU DE TROP-PLEIN
7 RACCORDEZ LE BROYEUR AU MONTAGE DE BASE
8 APPOSEZ L'ÉTIQUETTE DES SPÉCIFICATIONS

MODEL XX – XX
S/N XXXXXXXXXX
PUSH RED BUTTON TO RESET

9 RACCORDEZ LE TUBE D'ÉVACUATION AU TUYAU D'ÉVACUATION DES DÉCHETS
10 RACCORDEZ LE BROYEUR À L'ALIMENTATION ÉLECTRIQUE
11 CONSIGNES DE SÉCURITÉ IMPORTANTES
GARANTIE DE DÉPANNAGE COMPLÈTE

DEUTSCH

EINBAU- UND BEDIENUNGSANLEITUNG FÜR KÜCHENABFALLENTSORGER

TEILELISTE (Kann sich von Modell zu Modell unterscheiden)

▲VORSICHT	Das Vorsicht-Symbol macht Sie auf Gefahrenquellen aufmerksam, die zu Tod oder schwerer Körperverletzung führen können.
▲ACHTUNG	Das Wort „Achtung" zusammen mit einem Sicherheitswarnsymbol macht Sie auf Gefahrenquellen aufmerksam, die bei Nichtbeachtung leichtere oder mittelschwere Verletzungen zur Folge haben können.
ACHTUNG	Das Wort „Achtung" ohne ein Sicherheitswarnsymbol, wird benutzt, um auf Praktiken aufmerksam zu machen, die nicht mit Personenschäden in Zusammenhang stehen.

1 ÜBERPRÜFEN DER EINBAUDIMENSIONEN
2 ABFLUSSLEITUNG ABMONTIEREN
3 AUSEINANDERNEHMEN EINES NEUEN ENTSORGERS AUFHÄNGEVORRICHTUNG
4 OBERE AUFHÄNGEVORRICHTUNG AM SPÜLBECKEN MONTIEREN
5 ABWASSERROHR DES SPÜLBECKENS REINIGEN
6 SPÜLMASCHINENVERBINDUNG UND ÜBERLAUFANSCHLUSS
7 BEFESTIGUNG DES GERÄTES AN DER AUFHÄNGEVORRICHTUNG
8 ANBRINGEN DES DATENETIKETTS

MODEL XX – XX
S/N XXXXXXXXXX
PUSH RED BUTTON TO RESET

9 AUSLASSROHR AN DAS ABFLUSSROHR ANSCHLIESSEN
10 ANSCHLIESSEN DES ENTSORGERS AN DIE ELEKTRISCHE ZULEITUNG
11 WICHTIGE SICHERHEITSHINWEISE
IN-HOME-WARTUNGSGARANTIE

ITALIANO

ISTRUZIONI RELATIVE A INSTALLAZIONE, MANUTENZIONE E UTILIZZO DEL DISSIPATORE DI RIFIUTI ALIMENTARI

ELENCO COMPONENTI (può variare a seconda del modello)

▲AVVISO	Il simbolo "AVVISO" indica una situazione potenzialmente pericolosa che, se non evitata, potrebbe provocare gravi lesioni personali o addirittura la morte.
▲ATTENZIONE	Il simbolo "ATTENZIONE", se compare con il simbolo di pericolo, indica una situazione potenzialmente pericolosa che, se non evitata, potrebbe provocare lesioni di lieve o media entità.
ATTENZIONE	Il simbolo "ATTENZIONE", se compare senza il simbolo di pericolo, indica all'utente di seguire attentamente le istruzioni.

1 CONTROLLO DELLE DIMENSIONI
2 SCOLLEGAMENTO DELLO SCARICO DEL LAVELLO
3 SMONTAGGIO DEL GRUPPO DI MONTAGGIO DEL NUOVO DISSIPATORE DI RIFIUTI
4 COLLEGAMENTO DELLA PARTE SUPERIORE DEL GRUPPO DI MONTAGGIO AL LAVELLO
5 PULIZIA DEL TUBO DI SCARICO DEL LAVELLO
6 COLLEGAMENTO ALLA LAVASTOVIGLIE E COLLEGAMENTO DEL TROPPOPIENO
7 COLLEGAMENTO DEL DISSIPATORE DI RIFIUTI AL GRUPPO DI MONTAGGIO
8 APPLICAZIONE DELL'ETICHETTA CON I DATI TECNICI

MODEL XX – XX
S/N XXXXXXXXXX
PUSH RED BUTTON TO RESET

9 COLLEGAMENTO DELLA TUBAZIONE DI SCARICO AL TUBO DI SCARICO
10 COLLEGAMENTO DEL DISSIPATORE DI RIFIUTI ALL'ALIMENTAZIONE ELETTRICA
11 IMPORTANTI NORME DI SICUREZZA
GARANZIA ASSISTENZA COMPLETA PER INSTALLAZIONI DOMESTICHE

PORTUGUÊS

MANUAL DE USO, CUIDADOS E INSTALAÇÃO DO TRITURADOR DE RESÍDUOS ALIMENTARES

LISTA DE PEÇAS (pode variar dependendo do modelo)

▲ADVERTÊNCIA	Advertência significa uma situação potencialmente perigosa a qual, se não for evitada, pode resultar em morte ou ferimento grave.
▲CUIDADO	Cuidado, usado com um alerta de segurança, indica uma situação perigosa a qual, se não for evitada, pode resultar em ferimentos leves ou moderados.
CUIDADO	Cuidado, usado sem o símbolo de alerta de segurança, é usado para abordar práticas não relacionadas com lesões pessoais.

1 VERIFICAR AS DIMENSÕES DA INSTALAÇÃO
2 DESCONECTAR O DRENO DA PIA
3 DESMONTAR O CONJUNTO DE MONTAGEM DO NOVO TRITURADOR
4 FIXE O CONJUNTO DE MONTAGEM SUPERIOR À PIA
5 LIMPAR A TUBULAÇÃO DO ESGOTO DA PIA
6 LIGAÇÃO PARA A MÁQUINA DE LAVA-LOUÇAS E CONEXÃO DE TRANSBORDAMENTO
7 CONECTAR O TRITURADOR AO CONJUNTO DE MONTAGEM
8 AFIXAR A ETIQUETA DE ESPECIFICAÇÃO

MODEL XX – XX
S/N XXXXXXXXXX
PUSH RED BUTTON TO RESET

9 CONECTE A TUBULAÇÃO DE DESCARGA À REDE DE DRENO DO ESGOTO
10 LIGAR O TRITURADOR À ENERGIA ELÉTRICA
11 INSTRUÇÕES IMPORTANTES SOBRE SEGURANÇA
GARANTIA

SVENSKA

MONTERINGS-, SKÖTSEL- & BRUKSANVISNING FÖR MATAVFALLSKVARN

KOMPONENTFÖRTECKNING (kan variera beroende på modellen)

▲VARNING	Varning indikerar en potentiellt riskfylld situation som, om den inte undviks, kan resultera i dödsfall eller allvarlig personskada.
▲VAR FÖRSIKTIG	Var försiktig, använt tillsammans med säkerhetssymbolen, anger en riskfylld situation som, om den inte undviks, kan leda till smärre eller måttliga skador.
VAR FÖRSIKTIG	Var försiktig, använt utan säkerhetssymbolen, används vid förfaranden som inte är relaterade till personskador.

1 KONTROLLERA INSTALLATIONSMÅTTEN
2 LOSSA VASKENS AVLOPP
3 DEMONTERA DEN NYA KVARNENS MONTERINGSSATS
4 FÄST DEN ÖVRE MONTERINGSSATSEN VID VASKEN
5 RENGÖR VASKENS AVLOPPSRÖR
6 DISKMASKINS- OCH ÖVERFLÖDSANSLUTNING
7 ANSLUT KVARNEN TILL MONTERINGSSATSEN
8 FÄST SPECIFIKATIONSETIKETTEN

MODEL XX – XX
S/N XXXXXXXXXX
PUSH RED BUTTON TO RESET

9 ANSLUT KVARNENS UTLOPPSRÖR TILL AVLOPPSRÖRET
10 ANSLUT KVARNEN TILL STRÖMKÄLLAN
11 VIKTIGA SÄKERHETSFÖRESKRIFTER
FULL HEMSERVICEGARANTI

NORSK

AVFALLSKVERN FOR MATRESTER, INSTALLASJON, STELL OG BRUKERVEILEDNING

DELELISTE (Kan variere fra modell til modell)

▲ADVARSEL	Advarsel antyder en mulig farlig situasjon som kan føre til dødsfall eller alvorlig personskade dersom den ikke unngås.
▲FORSIKTIG	Forsiktig, benyttet sammen med symbolet for sikkerhetsvarsling, antyder en mulig farlig situasjon som kan føre til mindre eller moderat personskade dersom den ikke unngås.
FORSIKTIG	Forsiktig, benyttet uten symbolet for sikkerhetsvarsling, brukes for å påpeke bruk som ikke fører til personskade.

1 KONTROLLER INSTALLASJONSMÅLENE
2 UTKOBLING AV SLUKET I VASKEN
3 DEMONTERE DEN NYE AVFALLSKVERNENS MONTERINGSDELER
4 PÅSETTING AV ØVRE MONTERINGSSETT PÅ VASKEN
5 RENGJØR AVLØPSRØRET TIL VASKEN
6 TILKOBLING AV OPPVASKMASKINENHET OG OVERFLOMSSIKRING
7 KOBLE AVFALLSKVERNEN TIL MONTERINGSENHETEN
8 SETTE PÅ SPESIFIKASJONSMERKET

MODEL XX – XX
S/N XXXXXXXXXX
PUSH RED BUTTON TO RESET

9 KOBLE AVLØPSRØRET TIL AVLØPSUTTAKET
10 KOBLE AVFALLSKVERNEN TIL STRØMFORSYNING
11 VIKTIG SIKKERHETSINFORMASJON
FULL SERVICEGARANTI HJEMME

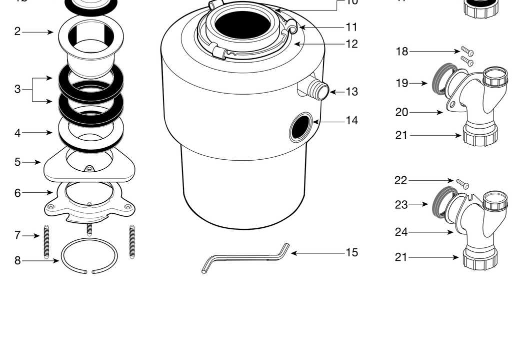

	1	2	3	4	5
(Evolution) 200-2, -7, -9	34.4 cm	18.5 cm	6.4 cm	23.4 cm	16.8 cm
(Evolution) 100-2, -7, -9	31.2 cm	17.1 cm	6.4 cm	20.5 cm	16.8 cm
Model 65-2B, -7C, -9B	31.8 cm	16.8 cm	6.4 cm	18.5 cm	13.1 cm
Model 55-2B, -2B A/S, -7C, -9B	31.8 cm	16.8 cm	6.4 cm	17.3 cm	13.1 cm
Model 45-2B, -7B, -9B	31.8 cm	16.8 cm	6.4 cm	15.9 cm	13.1 cm
LC-50-13	36.9 cm	19.3 cm	6.4 cm	20.6 cm	14.9 cm

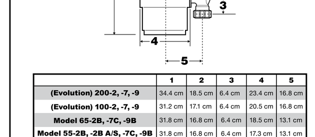

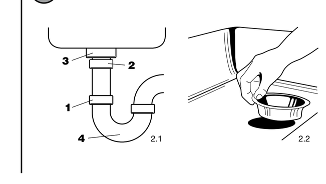

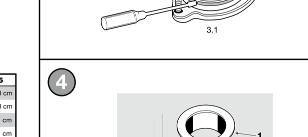

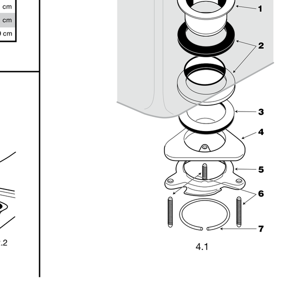

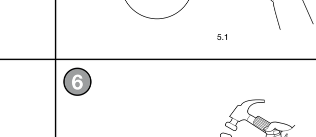

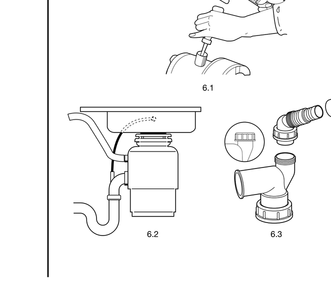

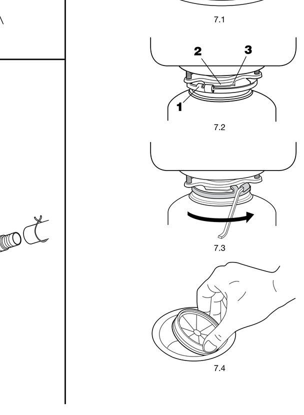

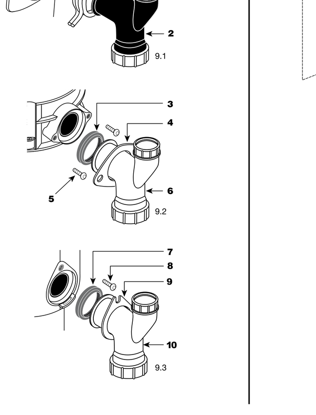

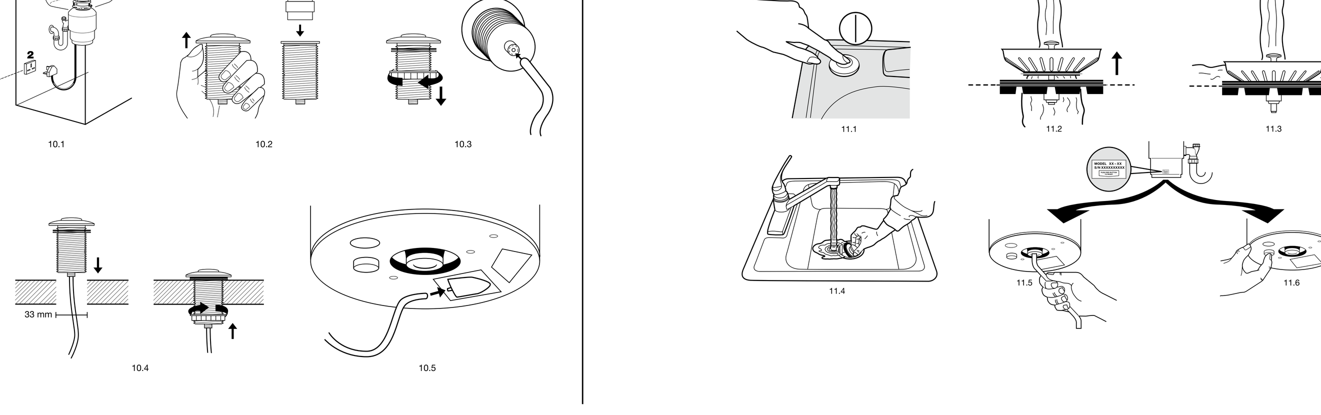

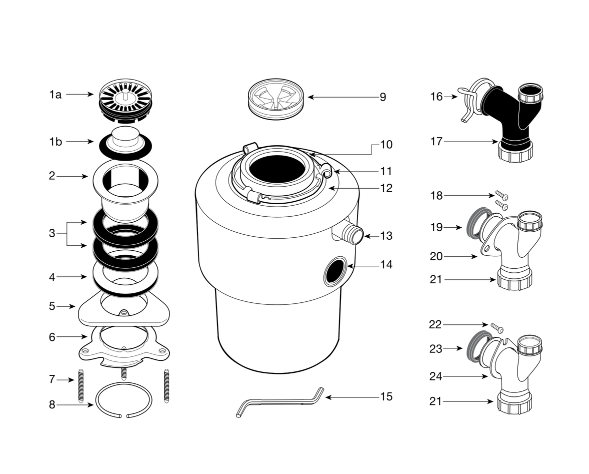

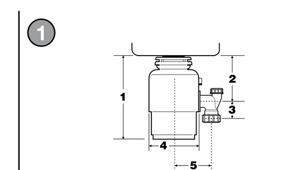

	1	2	3	4	5
(Evolution) 200-2, -7, -9	34.4 cm	18.5 cm	6.4 cm	23.4 cm	16.8 cm
(Evolution) 100-2, -7, -9	31.2 cm	17.1 cm	6.4 cm	20.5 cm	16.8 cm
Model 65-2B, -7C, -9B	31.8 cm	16.8 cm	6.4 cm	18.5 cm	13.1 cm
Model 55-2B, -2B A/S, -7C, -9B	31.8 cm	16.8 cm	6.4 cm	17.3 cm	13.1 cm
Model 45-2B, -7B, -9B	31.8 cm	16.8 cm	6.4 cm	15.9 cm	13.1 cm
LC-50-13	36.9 cm	19.3 cm	6.4 cm	20.6 cm	14.9 cm

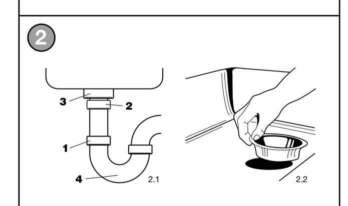

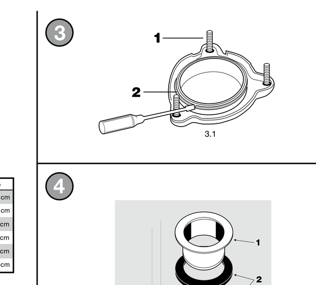

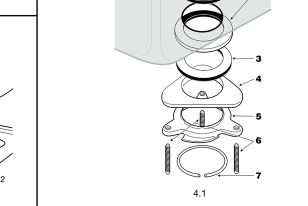

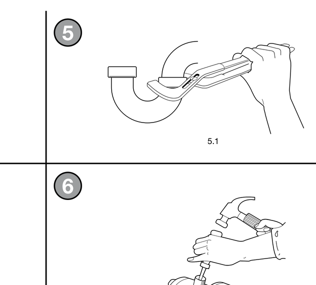

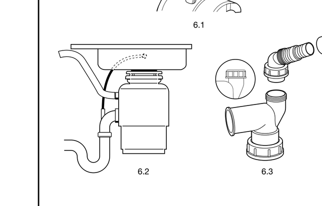

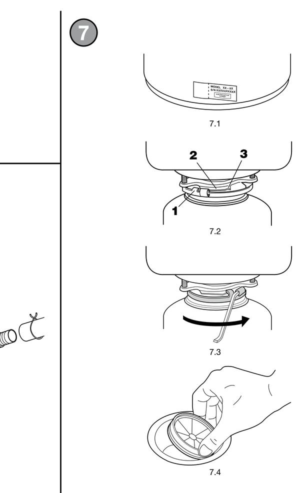

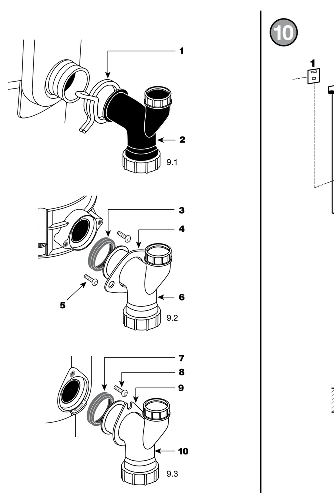

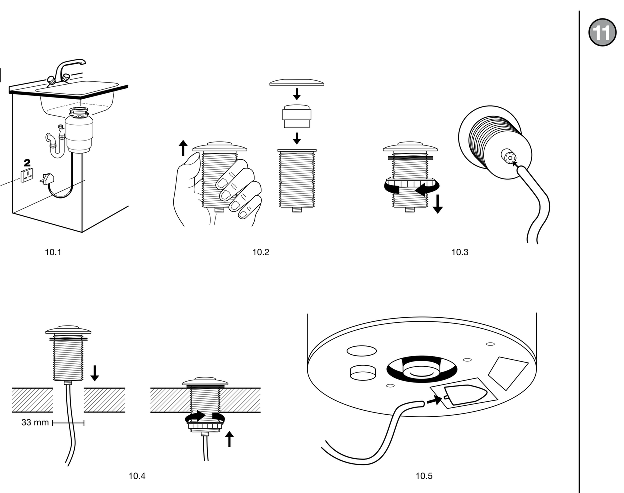

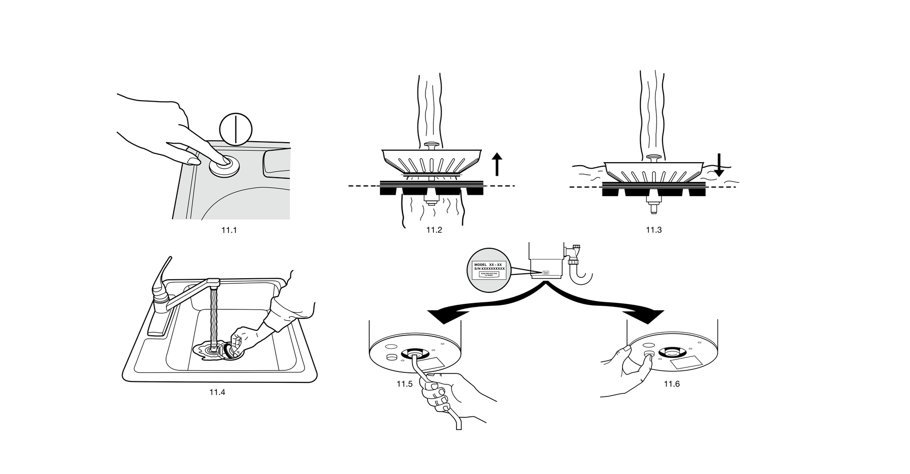

ČESKY

NÁVOD K INSTALACI, ÚDRŽBĚ A POUŽÍVÁNÍ DRTIČE.

Drtiče odpadků z potravin nabízejí alternativu přepravě potravinového odpadu na skládky, která je šetrná k životnímu prostředí. Rovněž mohou pomáhat snižovat emise skleníkových plynů. V příslušně vybavených čističkách odpadu lze potravinový odpad přeměnit na tuhé biocidaice a využít jej jako hnojivo. Takovéto čističky mohou také zachytávat plynný metan a recyklovat ho jako zdroj energie. (Obraťte se na čističku ve svém místě.)

Před instalací drtiče si přečtěte celý návod k instalaci, údržbě a používání drtiče. Než začnete s montáží, zjistěte, jaké nástroje, materiály a příslušenství budete potřebovat. Před instalací se přesvědčte, že máte všechny potřebné součásti drtiče.

POZNÁMKA: Modely Evolution drtí mnohem jemněji než jakýkoli jiný drtič. Z tohoto důvodu můžete zjistit, že drcení některých odpadků z potravin trvá o něco déle. Vzhledem k použití mikroprocesoru v modelech Evolution 200 čeká uživatele při spuštění více modelů Evolution 200 prodleva v řádu zlomků sekundy. To je naprosto normální.

POZNÁMKA: Přesvědčte se, že je instalace tohoto spotřebiče v souladu s příslušnými předpisy.

NÁSTROJE A MATERIÁLY, KTERÉ BUDETE POTŘEBOVAT:
Drážkový šroubovák, nastavitelné kleště, páska, bezpečnostní brýle

NÁSTROJE, MATERIÁLY A PŘÍSLUŠENSTVÍ, KTERÉ BYSTE MOHLI POTŘEBOVAT:
Šroubovák Phillips, vypouštěcí šnek, 9,5 mm svorka, matice na kabel (2), 38 mm sifon, 33 mm vrták, kladivo, pilka na kov, spona vodní hadice, francouzský klíč, elektrické vodiče, vypouštěcí připojovací sada myčky na nádobí, vypínač, nástavec vypouštěcí trubky

SEZNAM SOUČÁSTÍ (může se lišit v závislosti na modelu)

MONTÁŽNÍ JEDNOTKA
1a. Košové sítko (modely Evolution)
1b. Zátka (modely 65, 55, 45, LC-50)
2. Příruba dřezu
3. Pryžová těsnění (2)
4. Fibrové těsnění (na přání)
5. Pojistný kroužek
6. Montážní kroužek
7. Šrouby (3)
8. Pojistný kroužek

DRTIČ
9. Zvuková přepážka (modely Evolution, Model 65)
10. Montážní těsnění / odpadní přepážka
11. Úchyty
12. Spodní montážní kroužek
13. Přívod myčky na nádobí
14. Vypouštěcí otvor
15. Klíč

VYPOUŠTĚCÍ JEDNOTKA #1 (modely Evolution)
16. Hadicová spona
17. Černá vypouštěcí trubka s kolenem (průměr 38 mm / příruba Evolution)

VYPOUŠTĚCÍ JEDNOTKA #2 (modely 65, 55, 45)
18. Šrouby (2) 13 mm 1/4-20 UNC
19. Pryžové těsnění
20. Kovová příruba
21. Bílá vypouštěcí trubka s kolenem (průměr 38 mm / příruba ne Evolution)

VYPOUŠTĚCÍ JEDNOTKA #3 (LC-50 pro domácí instalaci)
22. Šroub (1) 19 mm 1/4-20 UNC
23. Pryžové těsnění
24. Kovová příruba
21. Bílá vypouštěcí trubka s kolenem (průměr 38 mm / příruba ne Evolution)

▲ VAROVÁNÍ Varování označuje potenciálně nebezpečnou situaci, která, pokud není eliminována, může vést k úmrtí nebo těžkému zranění.

▲ POZOR Pozor s bezpečnostním výstražným symbolem označuje nebezpečnou situaci, která, pokud není eliminována, může vést k lehkému nebo středně těžkému zranění.

POZOR Pozor bez bezpečnostního výstražného symbolu poukazuje na postupy, které se nevztahují na zranění osob.

DANSK

INSTALLATION AF KØKKENKVÆRN, PLEJE & BRUGERMANUAL

DELLISTE (Kan variere afhængigt af model)

▲ ADVARSEL Advarsel angiver en potentielt farlig situation, der, hvis den ikke undgås, kan resultere i død eller alvorlig personskade.

▲ FORSIGTIG Forsigtig, når det bruges sammen med sikkerhedsadvarselssymbolet, angiver en farlig situation, der, hvis den ikke undgås, kunne resultere i mindre eller moderat personskade.

FORSIGTIG Forsigtig, når det bruges uden sikkerhedsadvarselssymbolet, bruges om anvendelser, der ikke relaterer til personskader.

中文

食物垃圾处理器安装、维护和使用手册

食物垃圾处理器为将食物垃圾运送到垃圾填埋场进行处理提供环保替代方案。它们还可有助于减少温室气体排放量。在有能力的废水处理厂，食物垃圾可以转化为生物固体，并用作肥料。有能力的工厂还可以收集沼气，将其作为能源循环利用。（请咨询您所在地区的工厂。）

安装处理器之前请通读《安装、维护和使用手册》。开始之前确定您需要哪些工具、材料以及配件。安装处理器之前确保您拥有所有必要的处理器零件。

注：Evolution 机型比任何其它型号的处理器研磨得更为精细。因此，您可能会注意到，它研磨某些食物垃圾所需的时间略长。鉴于 Evolution 200 机型的微处理器，用户在启用所有 Evolution 200 机型时都会出现短暂延迟，这是完全正常的。

注：确保本设备的安装获得主管机构许可。

您会用到的工具和材料：
一字螺丝刀，可调手钳，绝缘带，安全眼镜

您可能会用到的工具、材料和配件：
十字螺丝刀，排污螺旋钻 (Drain Auger)，9.5 mm 电夹具，接线螺帽 (2)，38 mm 排水 U 形管，33 mm 螺孔钻，锤子，钢锯，水软管夹，管钳，铜地线，洗碗机排水连接套件，电开关，排水管延长管

零件清单（可能随机型不同而有所不同）

安装组件
1a. 过滤器（Evolution 机型）
1b. 塞子（65, 55, 45, LC-50 型）
2. 水槽法兰
3. 橡胶密封垫 (2)
4. 纤维衬垫（可选）
5. 支撑圈
6. 安装环
7. 螺丝 (3)
8. 卡环

处理器
9. 隔音板（Evolution 机型，65 型）
10. 安装密封垫/防溅板
11. 推进器
12. 下方安装环
13. 洗碗机进水口
14. 排放口
15. 小扳手

排放组件 #1
（Evolution 机型）
16. 软管夹
17. 黑色排放弯管
（38 mm 直径/Evolution 法兰）

排放组件 #2
（65, 55, 45 型）
18. 螺栓 (2) 13 mm 1/4-20 UNC
19. 橡胶密封垫
20. 金属法兰
21. 白色排放弯管
（38 mm 直径/非 Evolution 法兰）

排放组件 #3
（LC-50 用于家用安装）
22. 螺栓 (1) 19 mm 1/4-20 UNC
23. 橡胶密封垫
24. 金属法兰
21. 白色排放弯管
（38 mm 直径/非 Evolution 法兰）

▲ 警告 警告指示具有潜在危险的情形，如不避免，会造成人员死亡或重大人身伤害。

▲ 注意 "注意"和安全警示符号一起使用表示某种危险情形，如不避免，则可能造成轻微或中度人身伤害。

注意 未和安全警示符号一起使用的"注意"用来强调不会导致人身伤害的操作。

1 检查安装尺寸

1. 处理器高度
2. 水槽槽底到排放口中心线的距离。（如果使用的是不锈钢水槽，则加上 12 mm。）
3. 排放口中心线到排放管终端的距离。
4. 处理器宽度
5. 处理器垂直中心线到 U 形管接口中心线的距离。

为正确排水和防止水积存在处理器内，插入墙壁的废水管必须低于处理器排放口。

2 断开水槽排水管连接

▲ 注意
人身伤害
建议在安装食物垃圾处理器的过程中佩戴安全眼镜。

1. 使用管钳松开 U 形管 (4) 顶部的螺母 (1)（见图 2.1）。
2. 松开延长管顶部的螺母 (2)，取下延长管。
3. 松开水槽法兰底座上的螺母 (3)。
4. 将水槽法兰向上推过水槽孔并将其取下（见图 2.2）。
5. 清除水槽法兰区域的油污或其它碎屑。

注：水槽孔可能需要扩大以容纳处理器水槽法兰。水槽孔扩大工具可从 InSinkErator 经销商处获得。

3 拆卸新处理器 安装组件

1. 将安装组件翻过来（见图 3.1）并松开三个安装螺丝 (1) 直到您可以接触到卡环 (2)。
2. 使用螺丝刀将卡环从水槽法兰上撬起，安装组件随即分开。

4 将上部安装组件连接到水槽

请参考图 4.1。

1. 将两个橡胶密封垫 (2) 中的一个放在水槽法兰 (1) 下方。确保水槽孔区域没有碎屑。将水槽法兰/密封垫放入水槽孔。您可能希望在水槽中放一个较重的物体以便使水槽法兰保持在适当位置。（在该物体下放置一条毛巾以防出现划痕。）
2. 在水槽下方，将第二块橡胶密封垫 (2)、纤维衬垫（可选）(3) 和金属支撑圈 (4)（扁平的一面朝上）滑到水槽法兰上。
3. 将第二块橡胶密封垫、纤维衬垫（可选）和金属支撑圈放置到位，将安装环 (5) 滑到水槽法兰上以使其顶住支撑圈。
4. 在橡胶密封垫、纤维衬垫（可选）、支撑圈和安装环紧紧顶在水槽底部的情况下，将卡环 (7) 滑动到水槽法兰上，直到其扣在法兰的凹槽里。
5. 将三个安装螺丝 (6) 向上拧到水槽上，直到安装组件牢固、平稳地安装在水槽上。

5 清洁水槽废水管

不对水槽废水管进行清洁可能导致废水管堵塞。

1. 取下 U 形管。（见图 5.1）
2. 利用排污螺旋钻，清除排水 U 形管和主管之间的水平排水管上的硬化废物。

如果您不打算在处理器上连接洗碗机，请向前跳至说明 7。

6 洗碗机连接和防溢连接

洗碗机的废水可通过处理器上部的进水口排入处理器。所有机型的进水管内侧都有一个塞子，一旦被去掉，该击出型塞子将无法复原。

注：如果连接洗碗机时未去除该塞子，洗碗机可能会溢水。（连接必须符合当地管线连接规范。）

去除击出型塞子
1. 将处理器侧放，把螺丝刀插入洗碗机进水口，使螺丝刀的尖端顶在击出型塞子的外边缘上。
2. 用锤子敲击螺丝刀手柄一端，直到横压塞子松脱（见图 6.1）。
3. 将松脱的击出型塞子从处理器内部取出。

如果您的水槽溢水，则应连接到尾管上的防溢进水口（见图 6.2）。要连接防溢进水口，卸下防溢接头，去掉尾管上的塞子（见图 6.3）。

7 将处理器连接到安装组件

▲ 注意
人身伤害
为避免人身伤害，切勿将头或身体置于处理器下方；安装过程中设备可能会掉落下来。

将处理器安装到水槽上之前，取出处理器内部的所有物品。

1. 安装本产品时，必须保证位于处理器底部的电机复位按钮可轻易触及，并请保证此空间内没有任何其它物件。
2. 将处理器连接到安装组件之前，取下处理器底座上的规格标签穿孔的部分，放在一边以备在说明 8 中使用。（见图 7.1）
3. 调整处理器的位置，使三个安装挂钩 (1) 到位，以滑到安装轨 (2) 上。（见图 7.2）
4. 抬起处理器，将顶端（安装密封垫）插入安装组件。向右旋转下方安装环（使用小扳手或可调手钳）直到安装挂钩固定在安装环轨道上的凸缘 (3) 上（见图 7.3）。**确保全部三个安装挂钩都固定在凸缘上。**处理器现在可自行悬挂起来。
5. 在水槽中放水，然后检查有无渗漏。

EVOLUTION 200 和 EVOLUTION 100，65 型
将隔音板插入水槽口，扁平的一面朝上。（见图 7.4）

8 粘贴规格标签

该规格标签含有需要维修时您将需要了解的重要信息。

1. 将标签粘贴在处理器正面容易看到的地方。

MODEL XX – XX
S/N XXXXXXXXXX
PUSH RED BUTTON TO RESET

9 将排放管连接到垃圾排水管

注意
财产损坏

- 建议在安装食物垃圾处理器的过程中佩戴安全眼镜。
- 所有 Evolution 200 和 Evolution 100 机型必须使用随附的弹簧式软管夹连接到随附排水管（见图 9.1）。不使用随附管道和弹簧式软管夹将使保修无效，并可能导致减振排水组件过早出现故障。
- 切勿在水槽法兰以外的处理器连接上使用管道腻子。切勿使用螺纹密封剂或管道涂料，这些可能会损害处理器并造成财产损坏。
- 定期检查处理器和管线接头是否存在漏水。漏水会造成财产损坏。由于漏水造成的财产损坏，制造商不负责任。

排放管安装（EVOLUTION 200 和 EVOLUTION 100）
1. 将排放管 (2) 插入减振排水组件，用弹簧式软管夹 (1) 固定。（见图 9.1）

排放管安装（65, 55, 45 型）
1. 将金属法兰 (4) 放在排放管 (6) 上，将橡胶密封垫 (3)（密封垫扁部朝向金属法兰）插入排放管。（见图 9.2）
2. 用两个 13 mm 螺栓 (5) 将金属法兰和排放管固定在处理器上。

排放管安装（LC-50）
1. 将金属法兰 (9) 放在排放管 (10) 上。（见图 9.3）
2. 将橡胶密封垫 (7)（密封垫扁部朝向金属法兰）插入排放管（密封垫可能已预安装在排放管上）。用一个 19 mm 螺栓 (8) 将金属法兰和排放管固定在处理器上（密封垫将固定到位）。

所有处理器都需继续执行步骤 3-5
3. 旋转处理器，使排放管与排水 U 形管对齐。（为防止渗漏，切勿将排放管拉向或弯向排水 U 形管。）如果排放管过长，您可以从五金店购买延长管。（处理器必须保持在垂直位置以防止振动。）
4. 将螺母、套圈依次放在排放管上（未随附），然后拧紧在排水 U 形管上。（如果您使用的是双水槽，请在水槽的两边使用独立的排水 U 形管。）
5. 确保下方安装环仍然牢固地固定在安装法兰的凸缘上。（见图 7.3）

10 将处理器连接到电源

▲ 警告
触电

- 为避免触电，请在安装或维修处理器之前切断电源。
- 如果您对电不十分熟悉，请联系有资质的电工来将处理器连接到电路上。
- 如果使用三芯接地插头，插头必须插入三孔接地插座。
- 切勿改装设备随附插头（如适用）。
- 设备接地导体的不当连接会导致触电。
- 所有布线必须符合当地用电规范。
- 切勿将地线连接到燃气输送管上。
- 在安装适当的接地插座之前，切勿重新接通主墙修面板上的电流。
- 如果电源线损坏，必须由制造商、制造商的服务代理商或类似有资质的人员来更换，以免发生危险。

注：您必须使用接地壁装插座。任何附加插座均应由有资质的电工进行安装并正确接地。本处理器装有模压插头和电源线。

开/关控制
连续输送处理器有两种控制方式：双刀开关和空气开关（Evolution 200、Evolution 100 和 65 型内置；其它机型可作为选件提供）。

双刀开关 (1)：
如果您安装时需要壁装开关（未随附），则必须做好开/关标志，并由有资质的专业人员进行安装。壁装开关应位于工作台面上方便的位置，两个刀片之间的接触分离至少 3 mm（20 ADP 切换至 BS 3676）。使用 20 amp 电流连接到 20 amp 接地壁装插座 (2)。（见图 10.1）

空气开关（Evolution 200、Evolution 100，65 型 和 55-2B A/S 型）：
Evolution 200、Evolution 100，65 型 和 55-2B A/S 型 处理器包含内置空气开关（拉丝镍和铬面层）。空气开关通过向控制箱发送一股气流来通电/关闭设备。

空气开关安装
空气开关包括两种不同的按钮面层。如果您想要更换按钮面层（可选），只需拔起现有按钮，将另一按钮面层压在该设备上即可。（见图 10.2）

1. 在厨房操作台上或水槽边角处开钻你要使用的地方钻一个 33 mm 宽的孔。有些水槽可能已经带有合适的孔，取下盖子孔就会露出来。
2. 取下按钮式波纹管上的螺帽，同时将不锈钢垫圈和橡胶密封垫留在原位。将 PVC 管的一端插入按钮式波纹管的管口，另一端穿过操作台上的孔，以及操作台下方的螺母。（见图 10.3）
3. 将按钮式波纹管装在孔中，然后拧紧操作台下方的螺母。**切勿使用扳手来拧螺母。**（见图 10.4）
4. 拿起空气管的另一端，将其紧紧推入空气开关的管口，该管口位于处理器的底部。（见图 10.5）

不用空气开关
如果您更喜欢使用装在墙上的开关进行操作，则可以不用空气开关。处理器发货时空气开关处于"关"的位置。

1. 将随附的 PVC 管的一端插入按钮式波纹管的管口。（见图 10.3）
2. 拿起空气管的另一端，将其推入空气开关的管口，该管口位于处理器的底部。（见图 10.5）
3. 按下空气开关一次直到您听到开关"咔嗒"一声。取下按钮式波纹管和 PVC 管并将其弃于一边。处理器现在可由壁装开关启动。

处理器安装现已完成。操作处理器之前，阅读说明 11 中的所有操作和安全说明。最后，将塞子紧紧塞在水槽中。在水槽中注满水，取下塞子检查有无渗漏。

11 重要安全说明

▲ 警告

操作说明（EVOLUTION 200 和 EVOLUTION 100）
1. 从水槽口取下过滤盖，打开冷水。
2. 打开壁装开关或按下空气开关（见图 11.1）启动处理器。
3. 将食物垃圾缓慢放入处理器，将过滤盖保持在竖直位置（便于水流过）以便在研磨时将噪音降至最低同时减少垃圾喷出（见图 11.2）。
4. 研磨结束后，关闭处理器。放水至少 15 秒钟以对排水管进行冲洗。
5. 过滤盖在较低的位置也会起到塞子的作用。（见图 11.3）

操作说明（65, 55, 45, LC-50 型）
1. 从水槽口取下塞子，打开冷水。
2. 打开壁装开关或按下空气开关（见图 11.1）启动处理器。
3. 将食物垃圾缓慢放入处理器，正确放置塞子以使在研磨时尽可能减少可能的喷溅。（见图 11.4）
4. 研磨结束后，关闭处理器。放水至少 15 秒钟以对排水管进行冲洗。

上门全面服务担保

TÜRKÇE

YİYECEK ATIĞI ÖĞÜTÜCÜSÜ MONTAJ, BAKIM VE KULLANIM KILAVUZU

PARÇA LİSTESİ (Modele göre farklılık gösterebilir)

▲ UYARI
▲ DİKKAT
DİKKAT

РУССКИЙ

ИНСТРУКЦИЯ ПО УСТАНОВКЕ, ОБСЛУЖИВАНИЮ И ИСПОЛЬЗОВАНИЮ ДИСПОЗЕРА

СПИСОК ДЕТАЛЕЙ (может отличаться в зависимости от модели)

▲ ПРЕДУПРЕЖДЕНИЕ
▲ ВНИМАНИЕ
ВНИМАНИЕ

NEDERLANDS

HANDLEIDING VOEDSELRESTENVERMALER INSTALLATIE, VERZORGING & GEBRUIK

ONDERDELENLIJST (Kan per model verschillen)

▲ WAARSCHUWING Waarschuwing betekent een mogelijk dreigende situatie die tot ernstig letsel of overlijden kan leiden.

▲ VOORZICHTIG Als 'Voorzichtig' wordt gebruikt met het waarschuwingssymbool voor de veiligheid, betekent het een mogelijk dreigende situatie die tot licht of matig letsel zou kunnen leiden.

VOORZICHTIG Als 'Voorzichtig' wordt gebruikt zonder het waarschuwingssymbool voor de veiligheid, duidt dit op handelingen die geen verband houden met persoonlijk letsel.

POLSKI

INSTRUKCJA INSTALACJI I OBSŁUGI ROZDRABNIACZA DO ODPADKÓW ŻYWNOŚCIOWYCH

LISTA CZĘŚCI (mogą występować różnice w zależności od modelu)

▲ OSTRZEŻENIE Ostrzeżenie oznacza potencjalnie niebezpieczną sytuację, która może doprowadzić do śmierci lub poważnych obrażeń.

▲ PRZESTROGA Przestroga z symbolem wykrzyknika oznacza potencjalnie niebezpieczną sytuację, która może doprowadzić do powstania pomniejszych lub średnich obrażeń.

PRZESTROGA Przestroga bez symbolu wykrzyknika służy do zwrócenia uwagi na sytuacje niezwiązane z zagrożeniem bezpieczeństwa osób.
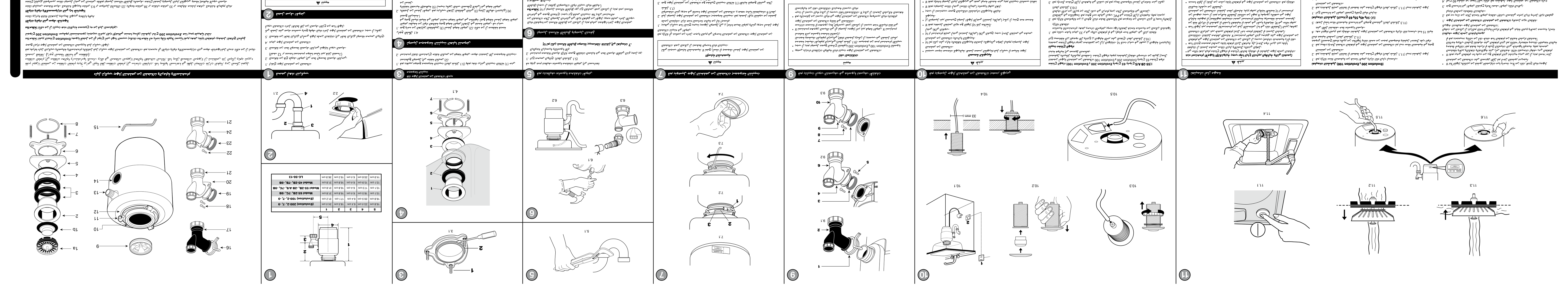
اللغة العربية